Product data sheet

M12 Field Wirable Assembly

https://finecables.com/m12-field-wirable-assembly-a-coded/1802/

Product description	M12 A-coding Female Straight Connector, Field Wirable Assembly, Solder, Unshielded, Front fastened, Contacts: 5, IP65
Part no.	MB12FAAFF05ST

Illustration

Scale drawing

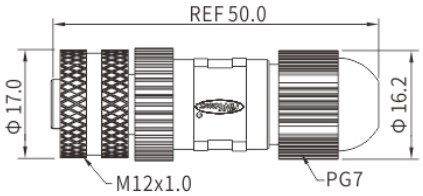

You can find the assembly instructions on the next page.

General features

Part no.	MB12FAAFF05ST
Standard	IEC 61076-2-101
Ambient temperature	-25℃ ~ +90℃
Suitable Cable Dia	4~5.5mm
IP rating	IP65 in locked condition
Mating endurance	>500 cycles

Electrical parameters

Insulation resistance	≥100MΩ
Contact resistance	≤5mΩ
Shielding	Unavailable
Rated current	4A
Rated voltage	60V AC / DC
Wire gauge	0.34mm²(AWG22)

Material

Connector insert	TPU
Connector contacts	Brass with gold plated
Connector body	PA
Coupling nut/screw	Brass with nickel plated

Product data sheet

M12 Field Wirable Assembly

https://finecables.com/m12-field-wirable-assembly-a-coded/1802/

Product description	M12 A-coding Female Straight Connector, Field Wirable Assembly, Solder, Unshielded, Front fastened, Contacts: 5, IP65
Part no.	MB12FAAFF05ST

Seal/O-ring	FKM

Assembly instructions

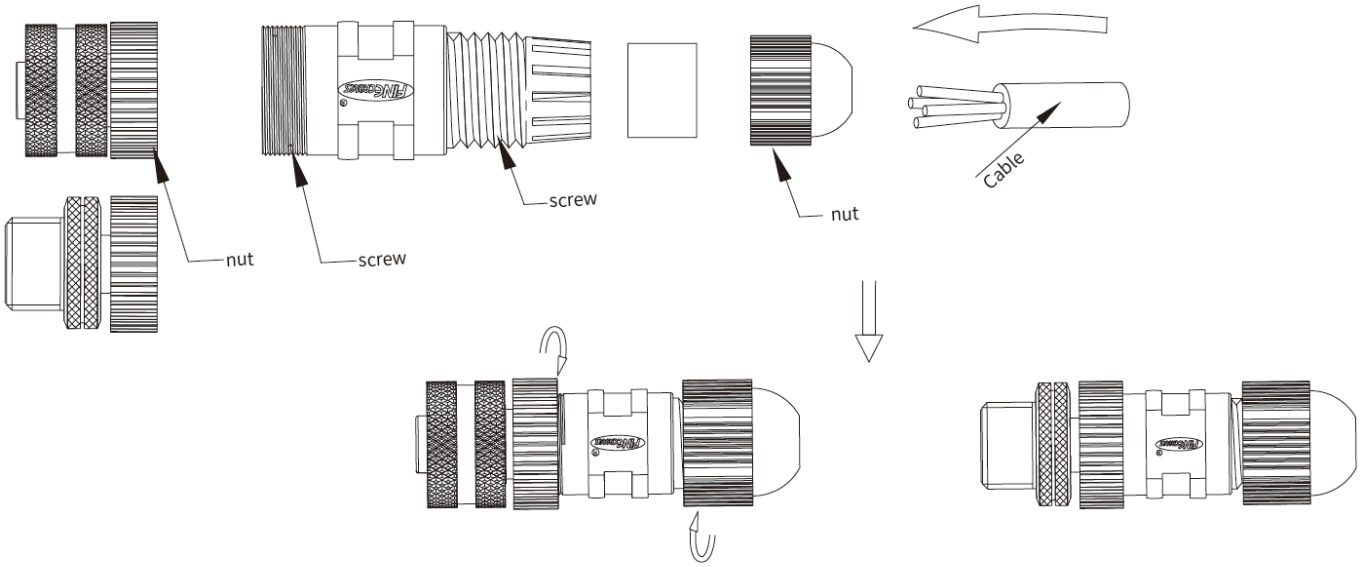

Security Notices

The connector must not be plugged or unplugged under load. Non-observance and improper use can result in personal injury.

The connectors have been developed for applications in plant engineering, control and electrical equipment construction. The user is responsible for checking whether the connectors can also be used in other areas of application.

Connectors which are used in circuits with voltages dangerous to the touch may only be installed and used by, or under the supervision of, persons with electrical engineering training, taking into account the applicable regulations and standards.

The user must take suitable safety precautions to ensure that the connector cannot be accidentally disconnected.

Please observe the pollution degree and the overvoltage category. For further information, please refer to the download center "Technical Information".

Product data sheet

M12 Field Wirable Assembly

https://finecables.com/m12-field-wirable-assembly-a-coded/1802/

Product description	M12 A-coding Female Straight Connector, Field Wirable Assembly, Solder, Unshielded, Front fastened, Contacts: 5, IP65
Part no.	MB12FAAFF05ST

Email: info@finecables.com

Web: www.finecables.com

Tel: +86 0769-81517898

Address: No.54 Changdi Road, Nanmian Community Humen Town Dongguan City, Guangdong Province, China.